Energy R&D at NYSERDA

The Solutions Network

Rochester, New York

Joseph Visalli

Director

August 10, 2004

Mission

- Utilize Innovation & Technology
- Evaluate and Expand (Energy) Options
- Benefits Measured in “3 E’s”
  - Energy
  - Economy
  - Environment

Scope

- Statutory Program Covers All State, All Energy Forms Since 1977
- SBC Program Has Some Geographic Limits and is Electric Only – Since 1998

Strategies

- Develop New Products
- Demonstrate New Technologies
- Obtain and Disseminate Information
- Emphasize Near- and Mid-Term and Applied Research
- Market Driven
- Promote the Adoption of CHP and Renewables
- Network across the State (universities, other agencies, organizations)
- Network nationally
  - ASERTTI / NASEO
  - DOE / EPA / States
  - STAC

Process

- Planning
- Competitive Process (PON's)
  - External Reviewers
  - Transparent and Fair Rules
  - Benefit to NYS
- Active Project Management
- Market Driven

R&D Program Funding – FY's 2004-2007

	2004-2005
System Benefits Charge Funding	
End-Use Renewables	$4,646
Wholesale Renewables	$14,598
Secure Power/Energy Storage	$1,832
Distributed Power and Combined Heat & Power	$14,358
Environmental Monitoring	$2,662
Institutional Barriers to Competition	$1,712
Next Generation and Strategic Technologies	$5,398
Total SBC	$45,206

R&D Program Funding – FY's 2004-2007 (cont'd.)

	2004-2005
Statutory Funding	
Energy Resources	$1,200
Transportation and Power Systems	$3,200
Environment	$2,500
Buildings	$2,900
Industry	$2,800
Total Statutory	$12,600
Total R&D Funding	$57,806

Energy Resources

- Wholesale Renewables (Renewable Portfolio Standard)
- Retail Renewables
- Education and Infrastructure
- New Products (Made in NYS)
- Indigenous Natural Gas

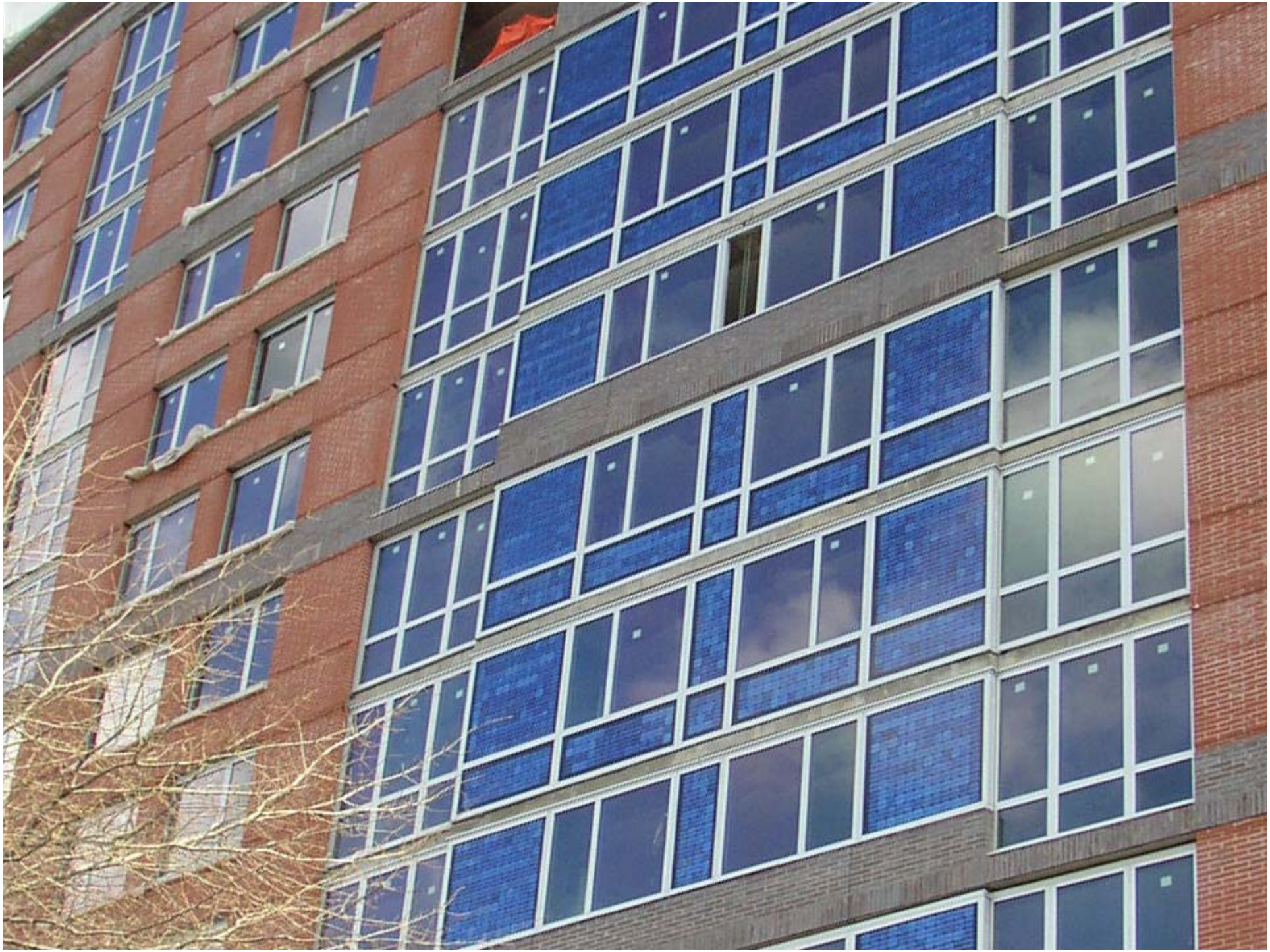

Here are New York schools participating in
School Power Naturally.SM
New York Energy Smart
NYSERDA
George E. Pataki, Governor
SchoolPower
1. Albany Free School
2. Beaver River CSD
3. Berlin CSD
4. Bethlehem CSD
5. Bonst-Hills Bolton Lake CS
6. Canadaigua CSD
7. Canton CSD
8. Carthage CSD
9. Clarkstown CSD
10. Colton Pierrepont CS
11. Derrow School
12. Edgeville CS
13. Dryden CSD
14. East Greenbush CS
15. Ethical Culture, Bronx
16. Highland CSD
17. Highland Falls/Ft. Montgomery
18. Ithaca City SD
19. Jamesville-Dewitt CS
20. Jefferson Lewis BOCES
21. Lansing CS
22. Liverpool CSD
23. Marcellus CSD
24. McGraw CSD
25. Newark HS
26. Newfane CS
27. North Colonie Central SD
28. Notre Dame-Bishop Gibbons
29. Oppenheim-Ephratah CS
30. Otsego North Catskills BOCES
31. Our Lady of Lourdes
32. Pavilion CSD
33. Potsdam CS
34. Sidney CSD
35. South Colonie CS
36. Somers HS
37. Spencer Van Etten CS
38. St. Francis of Assisi, Brooklyn
39. Sweet Home CSD
40. Tabernacle Christian Academy
41. Thousand Islands CSD
42. Van Hornesville ODY CS
43. Voorheesville CS
44. Warsaw CSD
45. Warwick Valley HS
46. Weyland-Cohocton CSD
47. Wayne CSD
48. Wayne-Finger Lakes BOCES
49. West Seneca CS
50. Williamsville CS
Counties with one or more participating schools
Location of participating school
www.SchoolPowerNaturally.org

Transportation and Power Systems

- New Transportation Products
- Systems Demonstrations
- New Power Systems Products
- Energy Storage

Continuously Variable Transmission
Folsom Technologies, Inc.

Improve Fuel Economy of Cars, Light Trucks/SUVs

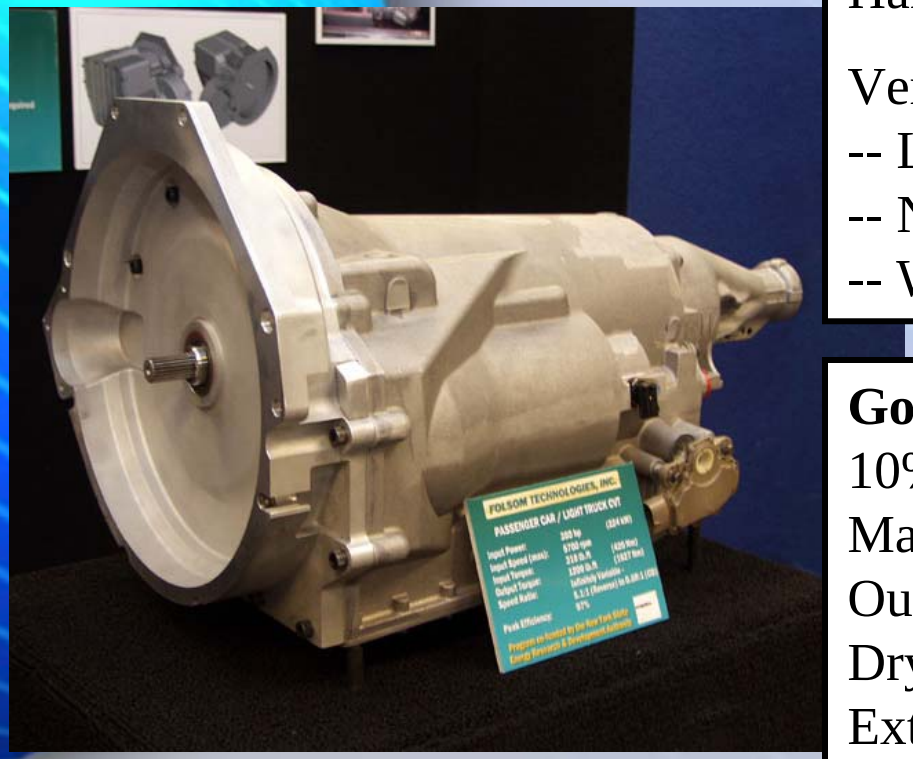

Blends hydraulic/planetary torque paths

Handles high-torque engines (V-8, diesel)

Versus comparable automatics and CVTs:
-- Lighter, smaller, lower cost
-- No exotic/costly materials or processes
-- Well suited to hydraulic regen braking

Goals:
10% mpg gain (>20% with regen)
Max inputs: 440 lb-ft, 350 hp
Outputs: >1300 lb-ft, 0.61 overdrive
Dry weight: 172 lbs
Externally smaller than conventional

High Output Alternator

Sailon Electric / Ecoair

Reduce Fuel Consumption of Police/Emergency Vehicles

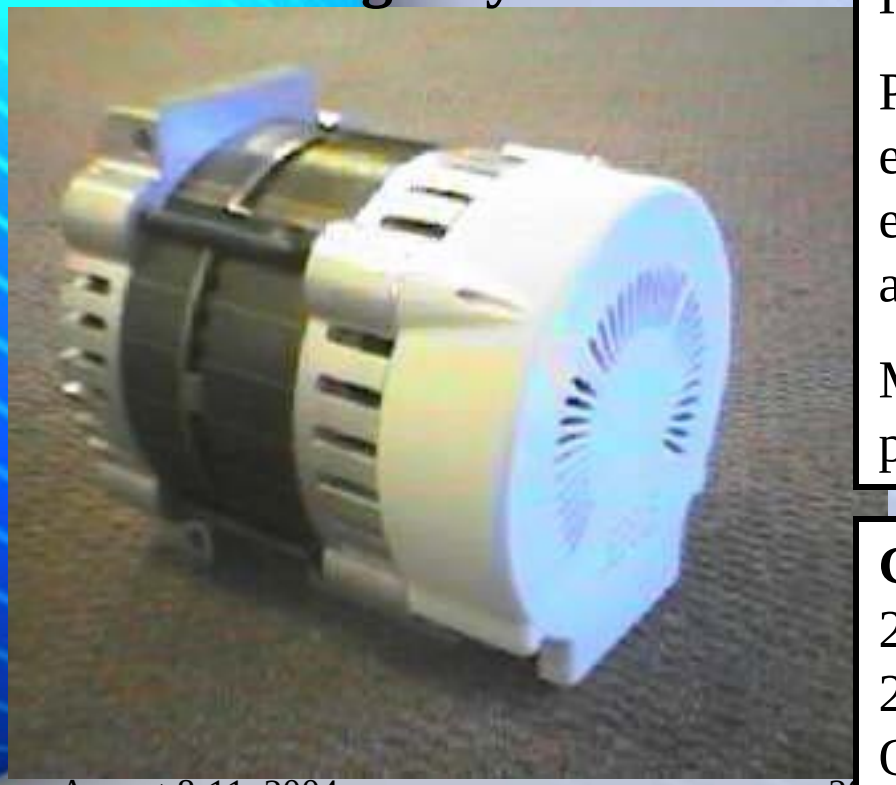

High-efficiency design

Produces high current output at low engine rpm; eliminates need to run engine at high idle speed to maintain alternator output

Market entry as replacement part for police/emergency fleets

Goals:
20% electrical efficiency gain
2-4% mpg gain
Output >100 amp @ 700 rpm (engine)

A/C Compressor Control Valve

Alumina Micro, RPI and Delphi Harrison

First Generation Design
w/Integral Sensors
& Microcontroller

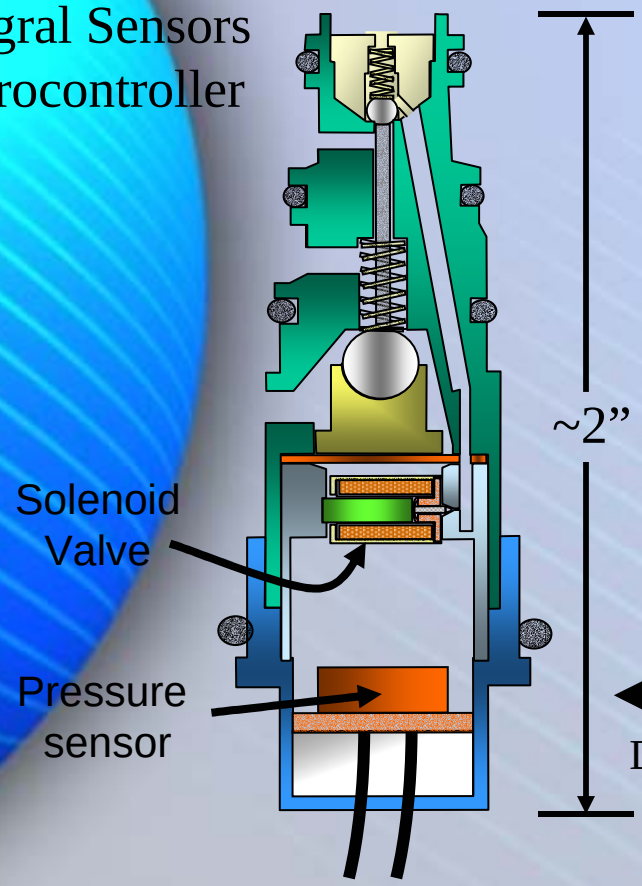

Goals:
First “smart valve” in GM vehicles, 2004 MY

Fuel Economy Gain: ~0.5 mpg

Future: MEMS devices

Detail

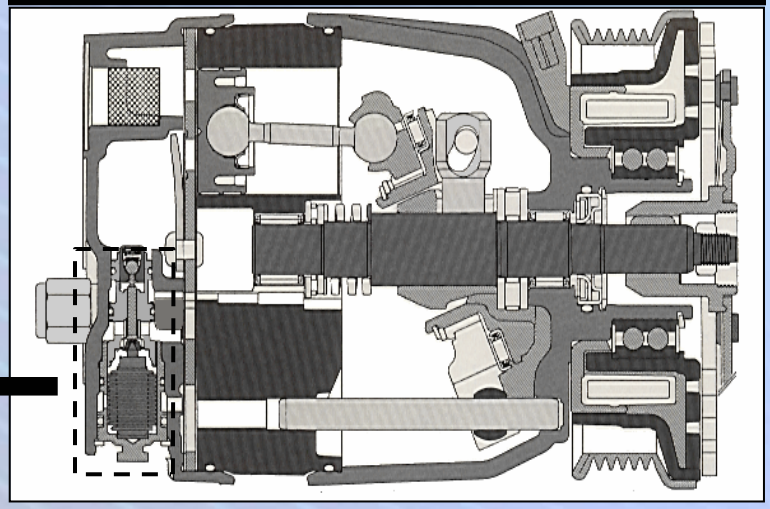

Cutaway View of Compressor
(with Conventional Valve)

Emission Control Catalyst

AirFlow Catalyst Systems, Inc.

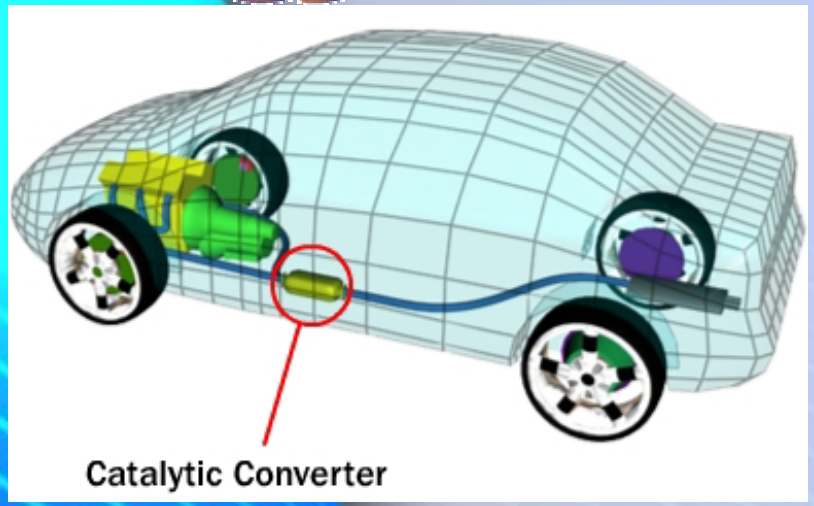

Efficient, Low Cost Cleanup of Vehicle Exhaust

NASA technology exclusively licensed to AirFlow, w/continuing support from NASA-Langley

Tin oxide washcoat improves catalyst performance; less need for expensive catalysts (e.g., platinum)

Lower backpressure improves mpg

Goals:
Manufacture for new car market; develop further for diesel and stationary markets

Bifuel Natural Gas System

Excalibur Environmental

Use Natural Gas in Gasoline Engines

Electronic controller connects to engine computer; driver can switch back-and-forth between fuels

Generic: Fits all engines, retrofit or factory

Goals:
Reduce gasoline use and emissions

Reduce NG market barriers:
-- No engine modifications
-- No range/power loss
-- Lower infrastructure cost

Dual Fuel System

Alternative Energy Technologies, Inc.

Use Natural Gas in Diesel Engines

Digital system controls simultaneous injection of both diesel fuel & NG; diesel fuel ignites first & provides spark for NG

Generic: Fits all engines, retrofit or factory

Demonstration at Schenectady County

Goals:

Burn 80% less diesel fuel; cut emissions of PM, NOx

Improve efficiency vs. NG engines that use spark plugs

Reduce NG market barriers:
-- No engine modifications
-- No range/power loss
-- Lower infrastructure cost

Ultracapacitor Energy Storage
General Electric

Field Test

Improve Design of Electric, Hybrid & Fuel Cell Buses

Ultracapacitors able to rapidly charge/discharge; good for regenerative braking

GE's controller links ultracaps to various types of drivetrains

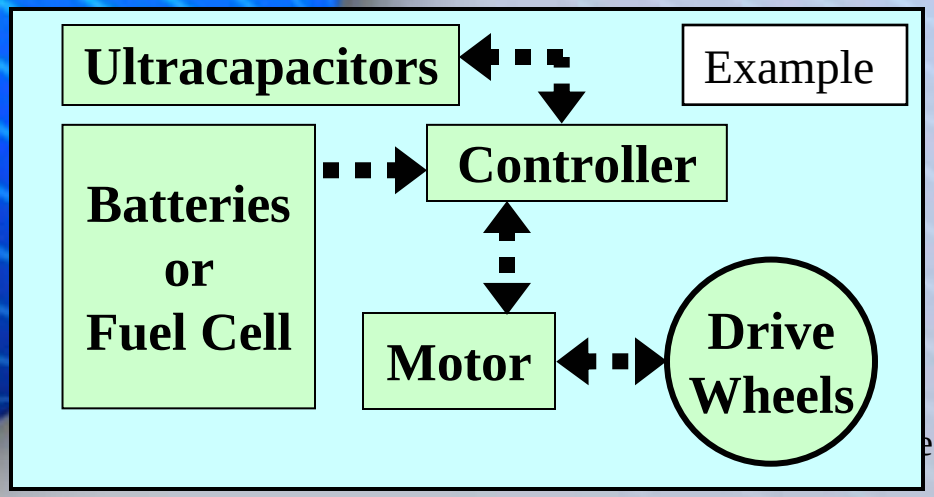

Goals:
More effective recovery of braking energy

Extend battery life

Reduce size/cost of batteries, fuel cells & other components

Hydraulic Regen Braking

TransiDrive, Inc.

Hydraulic System Captures & Reuses Vehicle Braking Energy

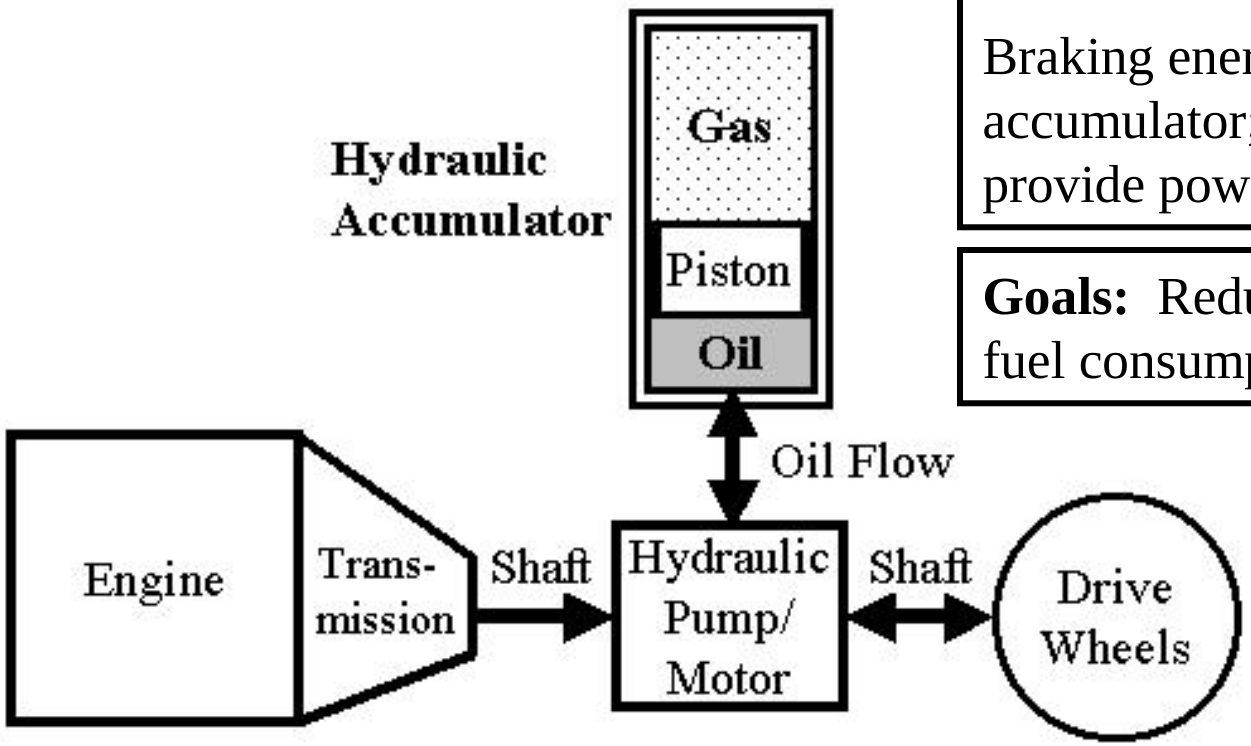

Hydraulic pump/motor coupled to vehicle drivetrain

Braking energy used to charge accumulator; flow reversed to provide power for acceleration

Goals: Reduce transit bus fuel consumption & emissions

Truck Stop Electrification

Niagara Mohawk / NYS Thruway Authority

Environment

- Energy Environmental Monitoring and Evaluation
- New Products
- Municipal Water and Waste Water
- Agricultural and Industrial Wastes

EMEP Program Focus

- **Target pollutants:**
  - **NOx, SOx, mercury, primary and secondary particulates, ozone**
- Research Areas:
  - Air Quality and related health research
  - Ecosystems Response to deposition of Sulfur, Nitrogen and Mercury
  - Cross-cutting research

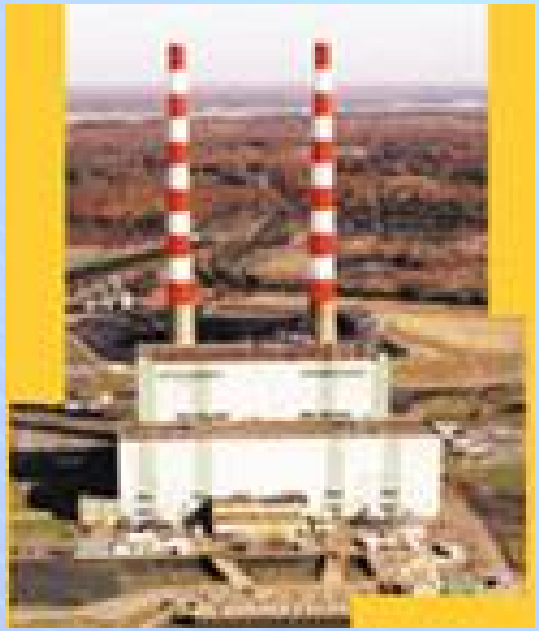

Program Strategies

- Address critical NYS and regional problems
- Provide a forum for exchange of information
- Support outreach and science-policy communication efforts
- Build capabilities in NY institutions
- Leverage limited dollars
- Strong technical review/active advisory group

EMEP Field Stations and Research Sites

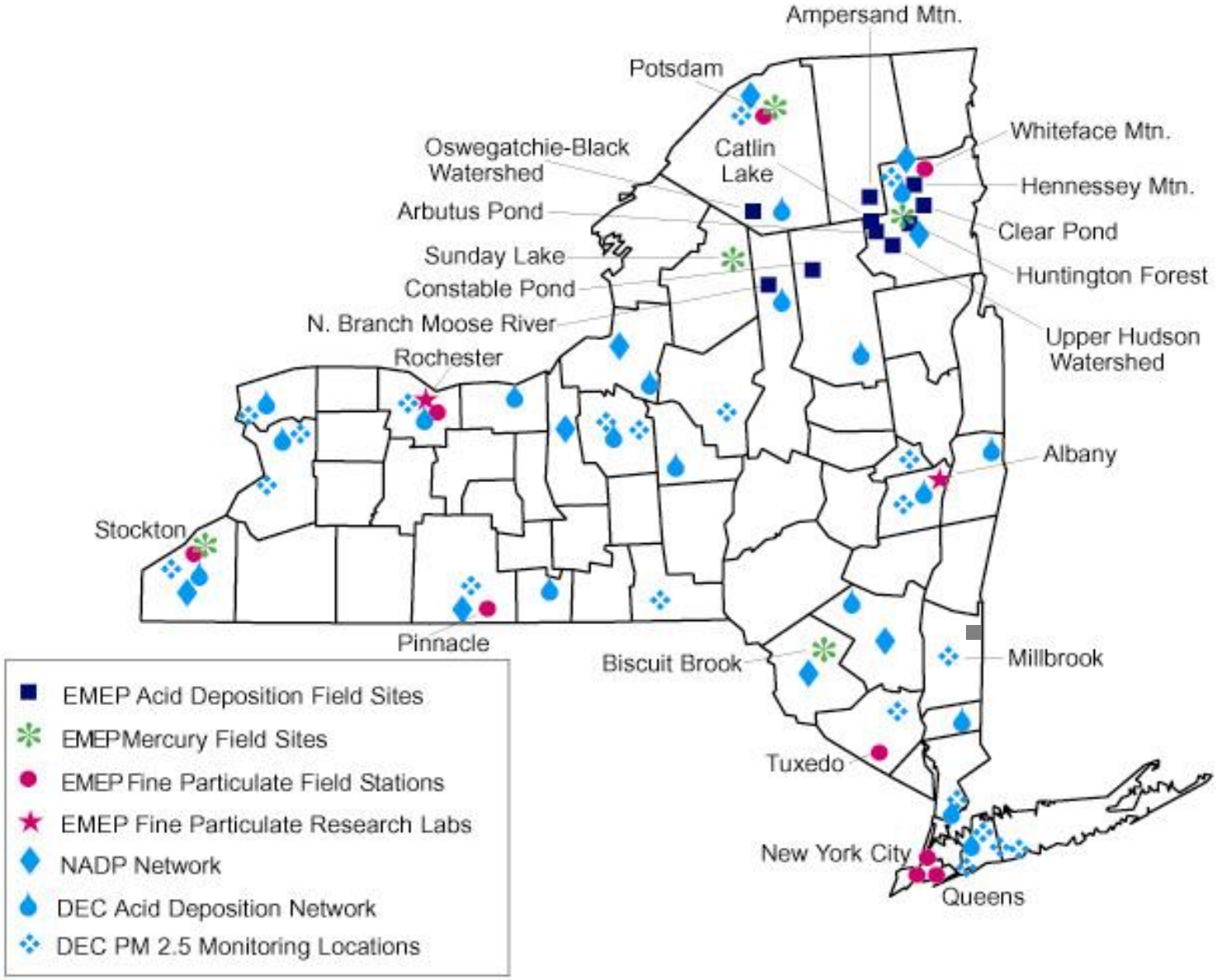

[redacted]

II. Ecosystem Response to Deposition of Sulfur, Nitrogen and Mercury

Monitoring

Field/Process Studies

Syntheses/Assessments

Modeling

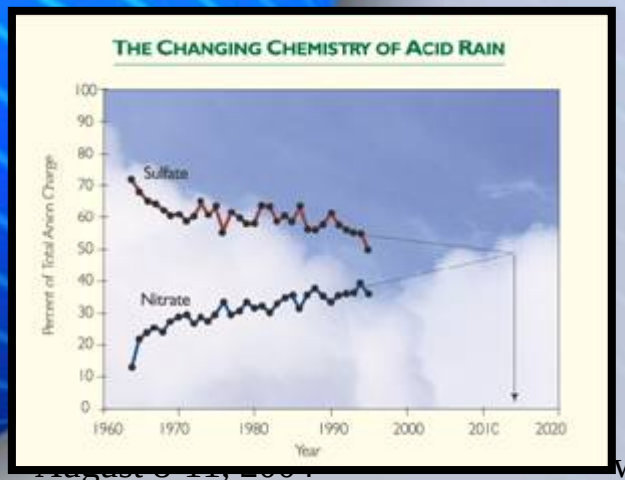

Buildings

- New Products
  - HVAC
  - Lighting
  - Controls/Systems
- Demonstrations
- Price Sensitive/Time-Sensitive Rates
- Load Curtailment
- Next Generation and Strategic

NYSERDA/NORA Low Sulfur Fuel Demonstration

- Demonstrate the advantages of reduced sulfur fuel oil through field testing in 1000 homes
- Evaluate actual changes in heating equipment performance with the lower sulfur fuel -measure differences in heating unit deposits, stack temperature, and other measures.
- Investigate and evaluate reductions in service costs by using low sulfur oil – through increased service intervals
- This field study program can help to overcome obstacles to widespread use of low sulfur heating oil by quantifying the benefits including changes in service requirements.

ECR Heat Pump Water Heater

ECR International, Inc.

WATTER SAVER

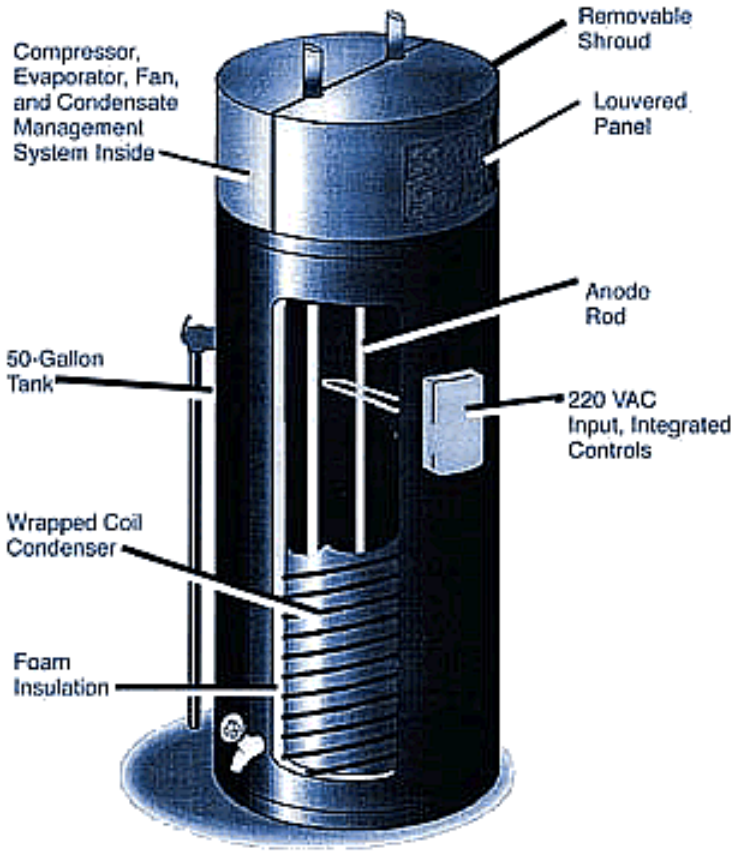

2004 Energy

Where Service and Technology Unite

LaMar Lighting Company Inc.

occusmart® technology

Who's watching your energy costs when you're not?

occusmart®

Industry

- New Products
- Industrial Process Improvement
- CHP
- Hydrogen
- Advanced Systems
  - Fusion
  - Super Conductivity
- Transmission and Distribution R&D

Optimum Air Corp. & Goulds Pumps

- Real-time emissions monitoring
- Reduced paint VOCs by 66%
- Reduced drying time from 2.5 hours to 25 minutes
- Improved product quality
- Cumulative Savings (98-01)
  - Energy: $685,000
  - Non-Energy: $4.3 Million
- 1998 Governor's P2 Award

RIT's National Center for Remanufacturing & Resource Recovery

- Reduce energy and hazardous chemical use
- Increase productivity and reduce bottlenecks
- Optimize cleaning of remanufactured auto parts
- More than 3000 re-manufacturers in NYS
- Baking soda abrasion, ultrasonic, thermal, vibratory, non-solvent techniques

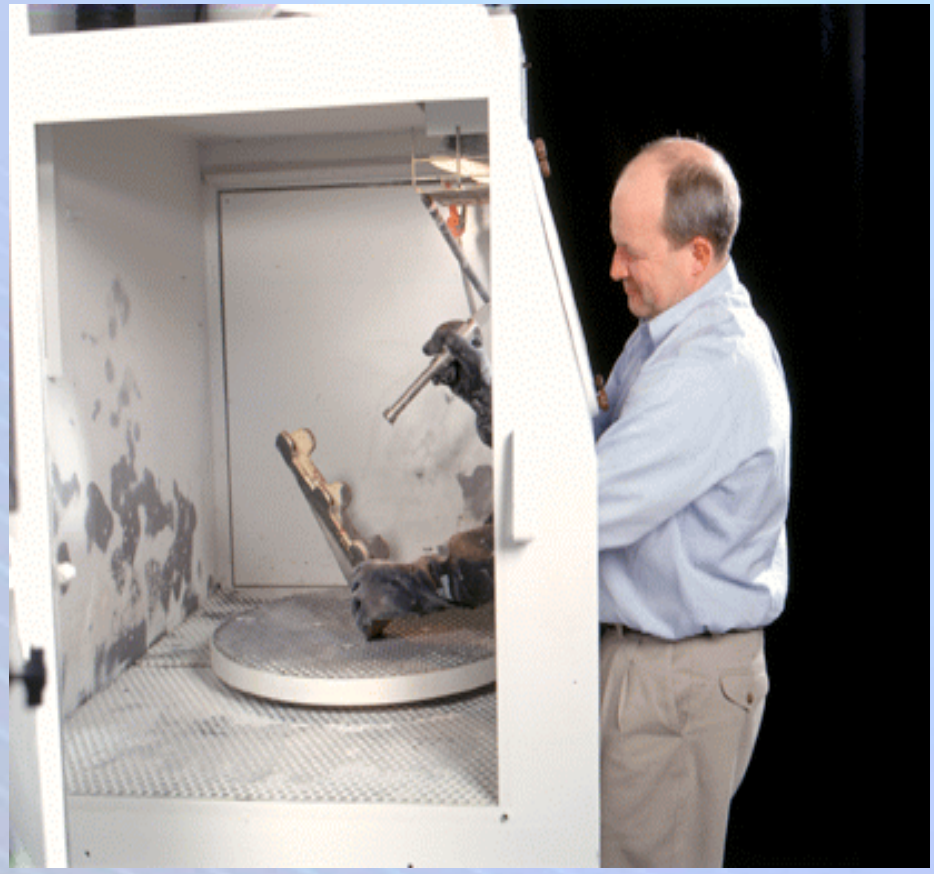

Lost Foam Casting @ General Motors, Massena, NY

- This is an excellent example of Industry-Academia-Government partnership - Funded by NYSERDA and DOE
- This is a great "New York" story, involving GM Powertrain Massena, Clarkson University of Potsdam, NY, and the application of high-tech equipment manufactured by VisionWorks of Buffalo, NY - -
- This project addresses Energy, Economic, and Environmental issues - - the development of sophisticated process control techniques will help GM Powertrain increase the yield of good castings and thereby minimize the use of energy for re-melting aluminum.

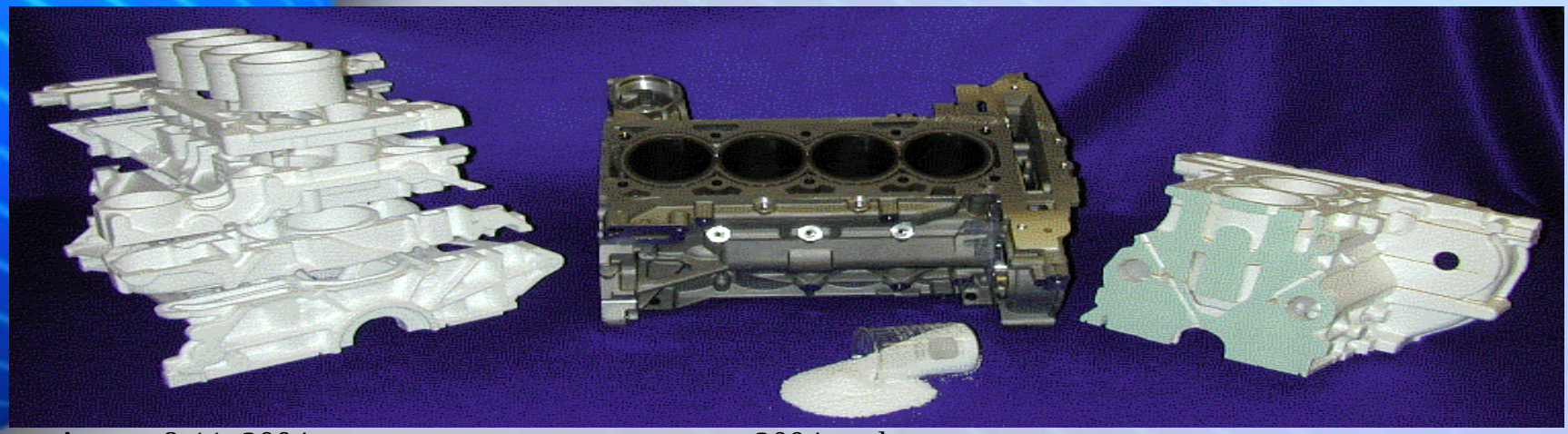

APC Paper Feasibility Study

- Located in Norfolk (St. Lawrence County) produces 36,000 tons of recycled paper per year
- Projected savings of $500,000 per year with a three 1250 kW engines CHP System
- Project Implementation on hold due to NiMo's SC-7 Rate issues.

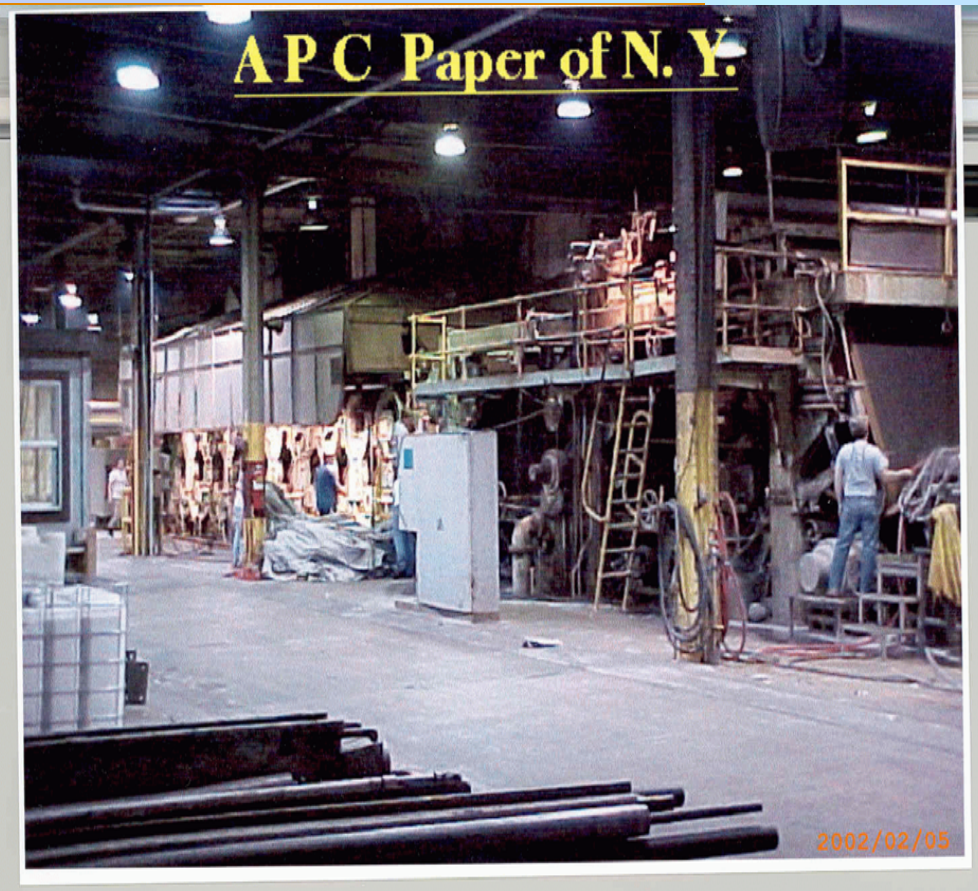

Fuel Cells at WWTP in NYC

- Eight UTC PAFC Fuel Cells at Four Municipal Waste Water Treatment Facilities in New York City (NYCDEP)
- Heat Recovered to Support Anearobic Digester
- Reduced On-site Emissions by Eliminating Flare
- NYSERDA: $1,000,000; NYPA: $12,000,000
- Four currently Operational.

Greater Rochester International Airport

- Two 750 kW Natural gas Recip. engines
- Heat recovered for space and DHW heating and a 300 ton absorber
- NYSERDA: $500,000; GRIA $2,000,000
- Status: Fully Operational.

SuperCable Project
IGC SuperPower
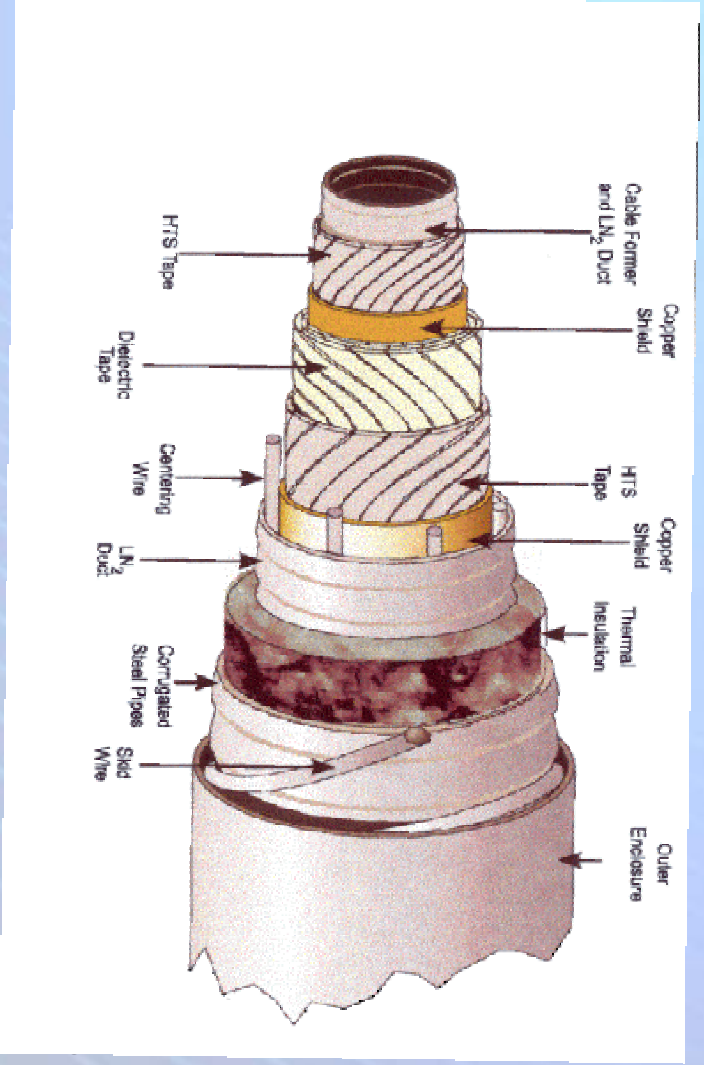
- IGC SuperPower, Inc., Schenectady, NY
- 350 meter HTS power cable in-grid application (34.5 kV, 1200 Amps, 72 MVA) in Albany.
- Develop 2nd generation (YBCO) HTS conductors and integrate into the conductor
- Groundbreaking June 2004